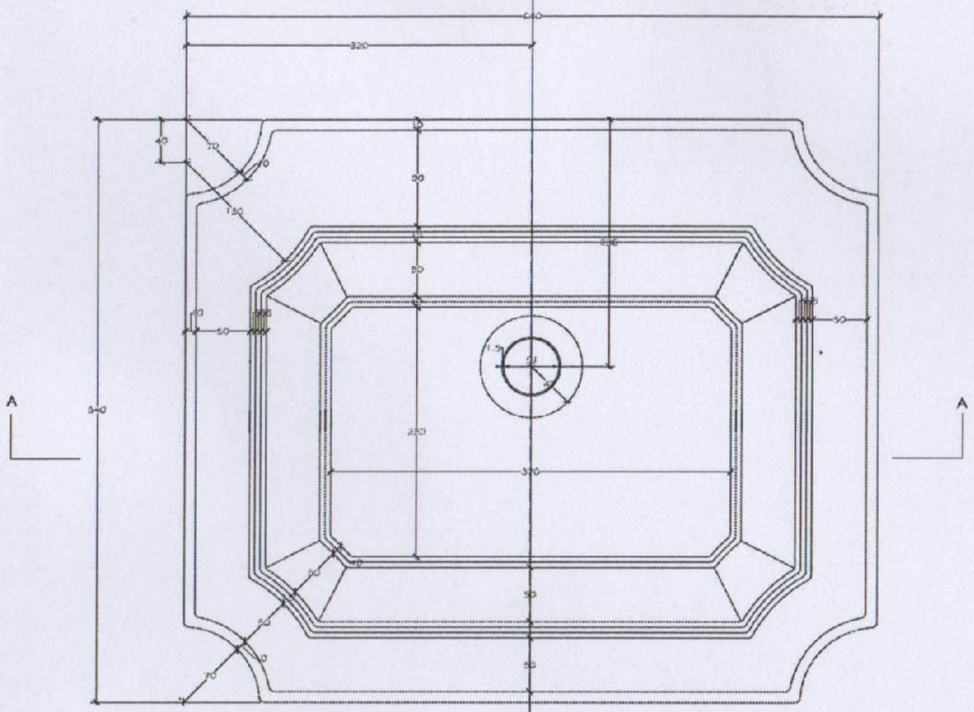

Plan of Wash Hand Basin

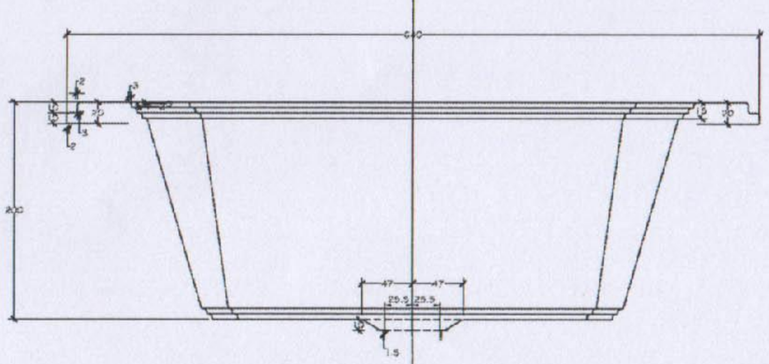

Section Thro Wash Hand Basin A -A

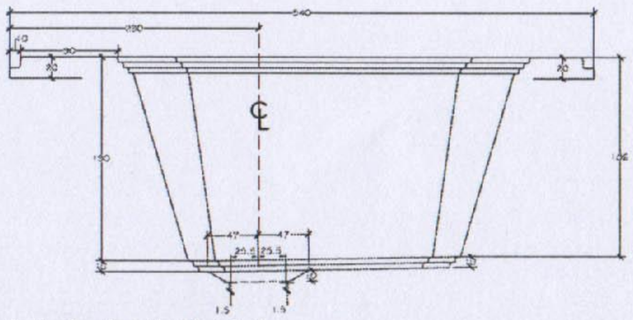

Section Thro Wash Hand Basin B - B

No	By	Revision	Date

Job title
BURGE & GUNSON
Ref: 7002 / ZP0 1002661

Drawing title
IMPERIALE WASH HAND BASIN
DESIGN DRAWING
Plan, Sections, Elevation

Scale	Drawing No.	Rev
1/2 FULL SIZE	IWHB - DD - 1	

Drawn by	Date and Size	Rules to Drawing No.
Ref Paper		

CONSULTO COLLECTION LTD